oceania
water • attitude

TECHNICAL SPECIFICATIONS - BATH

Intertek

Loft 6031 R-SFLR - Right hand drain, 3 Skirts (Front, Left and Right)

Series : **Authentik Signature**

Nominal dimensions:	**60" x 31" x 22" [152.4 cm x 78.7 cm x 55.9 cm]**				
Seats :	**1**	Product code:	**LO6031R-SFLR**	Draft revision :	**2023122113555**
Lumbar support :	yes	Arm rests :	no	*Low-profile available :*	no

Draft and specs

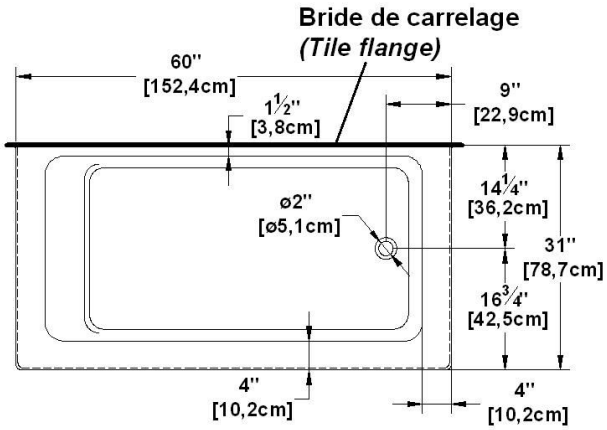

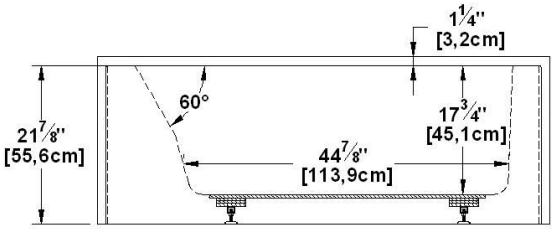

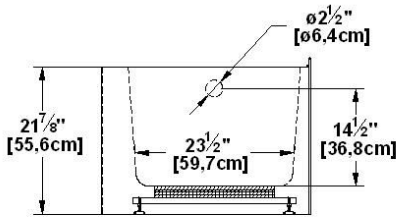

Specifications

Capacity:	**42 IMP Gal. / 54.7 US Gal. / 190.9 liters**
AeroMassage™:	**40 Easy Clean™ air jets**
Super AeroMassage™:	**AeroMassage™ + 12 Easy Clean™ air jets**
Comfort Air™:	**40 Easy Clean™ air jets**
Characteristics:	**3 integrated skirts**

Remarks

All measures have a precision of ± 1/4" (0,63cm)
If a measure is present on one side only, part is symmetrical
*internal dimensions taken at 4" (10cm) from bath bottom
*capacity is measured by filling the bath to 1-1/2" under the overflow

Available models

Soaker	☑
Comfort Air™	☑
AeroMassage™	☑
Super AeroMassage™	☑

Available recommended options

Front skirt:	Integrated
Recommended drain:	WOCOSBS14 (chrome finish)
Tile flanges:	Included on sides without skirt
Floating remote control:	Available
Linear overflow:	BDW114 (chrome finish)

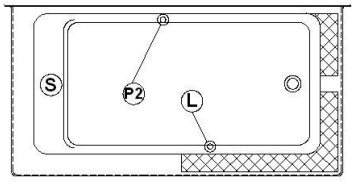

When ordered with a linear overflow (BDW), the installation panel option is mandatory.

Additional(s) note(s)

Integrated acrylic tile flanges.

Legend

S	Blower	L	Chromatherapy light
P2	Grab bar	C	Keypad

Recommended faucets drilling location*

Deck cut-out line - - - - - - - - -

**It is possible to install the faucets elsewhere on the product. The installer must verify that there are no piping or wires before drilling.*

IMPORTANT NOTE: Specifications, dimensions and models are subject to change.
Visit our website http://www.oceania-attitude.com to access up-to-date dimensions and information. In all cases, information on the website is the most up-to-date.

Head office

591, avenue des Entreprises
Thetford Mines, Quebec
CANADA G6H 4B2

Contact numbers

Phone : 1-877-332-4224
Fax : 1-866-460-4334

Internet

Web : http://www.oceania-attitude.com
Email : info@bainsoceania.com